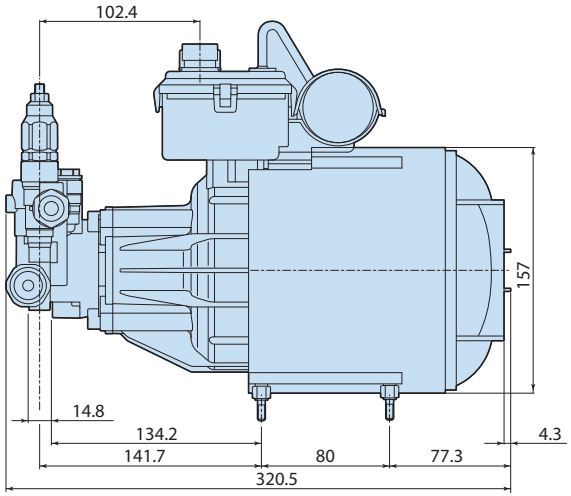
102.4
157
14.8
134.2
141.7
80
77.3
4.3
320.5

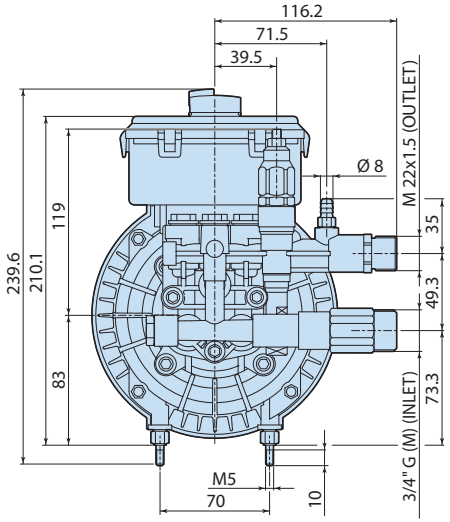
116.2
71.5
39.5
Ø 8
M 22x1.5 (OUTLET)
35
49.3
73.3
3/4" G (M) (INLET)
239.6
210.1
119
83
M5
70
10

2908504