WMC / WMC-F

CARATTERISTICHE - SPECIFICATIONS

			WMC	WMC-F
IN	DIAMETER	Ø	1/2 BSP	1/2 BSP
	PRESS.	Min.	- 0.1 bar - 1.5 PSI	1 bar - 15 PSI
		Max.	6 bar 87 PSI	6 bar 87 PSI
	TEMP.	Max.	60° C. 140° F.	
OUT	DIAMETER	Ø	3/8 BSP	
SHAFT		Ø	HOLLOW 28 mm	
OIL		SAE 75W 90	0.6 litri 0.16 U.S.G.	
PESO WEIGHT		Kg / lbs	7.6 / 16.7	

M - IEC 100-112 B14-28mm

pag.9

WMC: Dx T R B

WMC-F: Dx B Bz R

OPTIONAL: Sx Bz

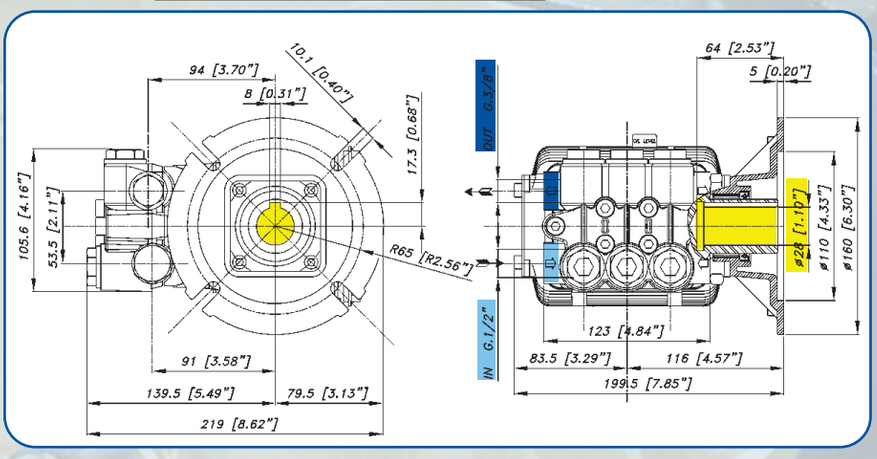

CARATTERISTICHE - FEATURES / WMC 1450 rpm / PERFORMANCE CHART

CODICE *CODE*	MODELLO *MODEL*	PRESS MAX / MAX PRESSURE Bar	*PSI*	PORTATA / FLOW L/min	*GPM*	POTENZA / POWER KW	*HP*	PIST. *PLUNG.* Dia. mm	CORSA *STROKE* mm
04.8050.97.3	WMC 1117	170	2500	11	2.9	3.3	4.5	18	9.8
04.8051.97.3	WMC 1217	170	2500	12	3.1	3.6	5	18	10.8
04.8052.97.3	WMC 1316	170	2500	13	3.4	4	5.5	18	12.4
04.8053.97.3	WMC 1515	150	2200	15	3.9	4	5.5	18	13.6

WMC-F 2800 rpm

04.8060.97.3	WMC 1114 F	140	2000	11	2.9	2,9	4	15	8
04.8061.97.3	WMC 1120 F	200	2900	11	2.9	4	5.5		
04.8062.97.3	WMC 1316 F	160	2350	13	3.4	4	5.5	15	9.8
04.8063.97.3	WMC 1320 F	200	2900	13	3.4	5.1	7		
04.8064.97.3	WMC 1515 F	150	2200	15	3.9	4	5.5	15	10.8
04.8065.97.3	WMC 1520 F	200	2900	15	3.9	5.5	7.5		